PM64G94 2.5V to 16V, 140A (70A/phase) High Frequency DC-DC Power Block

Features

- Input Voltage Range: 2.5V to 16V
- Maximum Continuous Current: 140A
- Peak Efficiency: 90% at 13.5V_{IN} to 0.8V_{OUT}
- Maximum Switching Frequency: 2MHz
- Operating Temperature Range: -40°C to 125°C
- Protection:
  - V_{IN} and VDRV UVLO
  - High Side Over Current Protection
  - Cycle-by-cycle Over Current Limit
  - Over Temperature Protection (OTP)
- 10mm x 9mm x 5mm 72-Pin LGA package

Application

- Server and Computing
- FPGA and ASIC Core Power
- Graphic Card Core Regulators
- Data Center
- Artificial Intelligence

Description

The PM64G94 is a two-phase high-efficiency DC-DC power block with two independent outputs, which can be used separately or in parallel. It achieves 140A of continuous output current over a wide input voltage range from 2.5V to 16V. The integration of smart drivers, power MOSFETs, and inductors achieves compact size while maintaining high efficiency. It also comes with an accurate current sense to monitor the inductor current and temperature sense to report junction temperature.

The compact design saves space on system board, minimizes trace length and loss between load and power block. The power block is packaged in a thermally enhanced, compact and low profile package which only needs low profile external heatsink to meet thermal performance. The package is suitable for automated assembly by standard surface mount equipment. The power block is RoHS compliant.

Typical Application

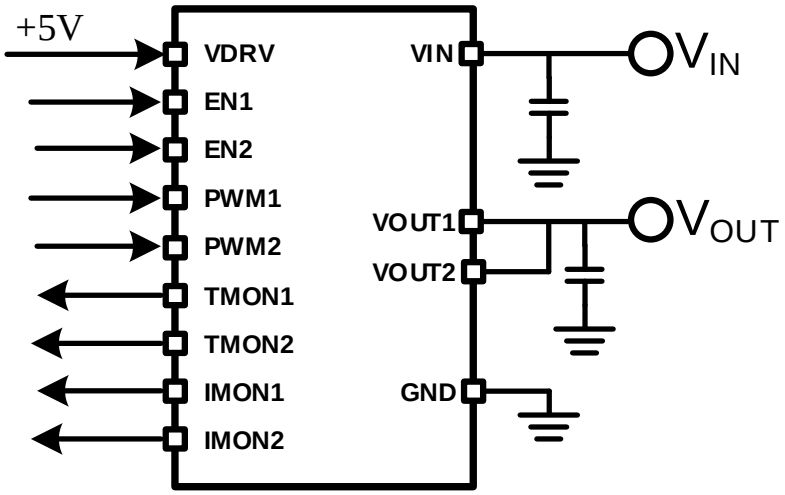

IPG SEMICONDUCTOR (SHENZHEN) CO.,LTD. All rights reserved.